Amarillo®
Gear
Company LLC

Post Office Box 1789
Amarillo, Texas 79105
2401 Sundown Lane (79118)
Ph. (806) 622-1273
Fax (806) 622-3258

AMARILLO®
GENERATION II™

FOR COOLING TOWER APPLICATIONS

OPERATION AND MAINTENANCE INSTRUCTIONS

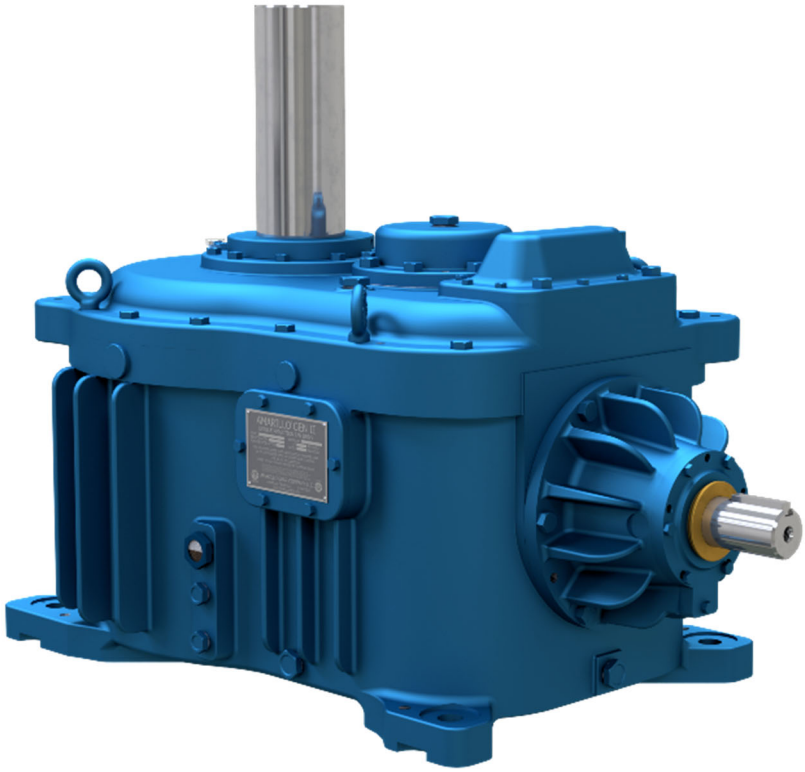

Each Amarillo® Fan Drive is the result of careful design and manufacturing techniques. As with any precision machine component, proper installation, maintenance, and operating procedures are imperative for long life and trouble-free service. Do not install or operate until you have read and understand this manual; failure to do so will void the warranty. Contact Amarillo® Gear Co. if required. Our engineers will be pleased to assist when unusual conditions require special procedures.

A Marmon | Berkshire Hathaway Company

OMGT 09/2026

TABLE OF CONTENTS

1. **SAFETY INFORMATION** **2**
   1.1 SYMBOLS AND SIGNS USED 2
   1.2 GENERAL SAFETY INFORMATION 2
2. **RECEIVING INSPECTION** **3**
   2.1 INSPECT NAME PLATE 3
3. **STORAGE INSTRUCTIONS** **3**
   3.1 ACCEPTABLE STORAGE 3
   3.2 LONG TERM STORAGE 3
4. **INSTALLATION** **3**
   4.1 OIL FILL 3
   4.2 CLEAN RUST PREVENTATIVE 4
   4.3 INSTALLATION & LEVELING FAN DRIVE 4
   4.4 INSTALL FAN 4
   4.5 CHECK MOTOR ROTATION 4
   4.6 INSTALL DRIVE SHAFT 4
   4.7 SERVICE PIPING 4
   4.8 ELECTRICAL CONNECTIONS 4
   4.9 BREATHER 4
   4.10 BEARING ISOLATOR 4
5. **OPERATION** **5**
   5.1 REVERSING OPERATION 5
   5.2 NON-REVERSE (BACK-STOP) OPTION 5
   5.3 EXTREME COLD OPERATION 5
6. **MOTOR SELECTION PRECAUTIONS** **5**
   6.1 TWO SPEED 5
   6.2 VARIABLE SPEED 5
7. **SCHEDULED MAINTENANCE** **6**
   7.1 DAILY 6
   7.2 WEEKLY 6
   7.3 EVERY SIX MONTHS OR 2500 HOURS 6
   7.4 EXTENDED OIL CHANGE INTERVALS 6
8. **INACTIVE FAN DRIVES** **7**
9. **LUBRICATION** **7**
   9.1 MINERAL OILS 7
   9.2 SYNTHETIC OILS/OIL HEATERS 7
   9.3 OIL CAPACITY 8
10. **EXTERNAL PART LOCATIONS** **8**
11. **PARTS LIST** **9**

The following instructions are offered to cover most conditions. Our engineers will be pleased to assist when unusual conditions exist. A copy of this document should be kept and maintained by the end user of the Generation II™ Fan Drive.

1. SAFETY INFORMATION

1.1 SYMBOLS AND SIGNS USED

Indicates a hazardous situation that, if not avoided, will result in death or serious injury.

Indicates a hazardous situation that, if not avoided, could result in death or serious injury.

Indicates a hazardous situation that, if not avoided, could result in minor or moderate injury, and may result in damage to the fan drive.

1.2 GENERAL SAFETY INFORMATION

It is the sole responsibility of the owner/operator to carefully read this manual and to observe and ensure the continued practice of all safety statements including dangers, warnings, and cautions. Failing to do so may result in death, serious injury, or fan drive failure.

MAINTAIN A COPY OF THIS MANUAL FOR THE FULL-SERVICE LENGTH OF THE FAN DRIVE.

⚠WARNING

This product contains a chemical known to the State of California to cause cancer.

This product contains a chemical known to the State of California to cause birth defects or other reproductive harm.

⚠WARNING

The fan drive should be operated only within its design and performance specifications; **injury or damage to the system may occur if operated outside of these specifications.**

Keep hands and all foreign objects from all internal and external moving parts of the fan drive; **failing to do so may cause injury or damage to the system.**

Damaged fan drives must be taken offline until properly repaired.

⚠ DANGER

Transport, installation, plumbing, operation, maintenance, and inspections should be handled by properly trained technicians; **failing to do so will shorten product life, cause injury, or damage to the fan drive.**

Never stand directly under any suspended equipment by a crane or other lifting mechanism; **personal injury or death may result.**

Do not install or operate any equipment or machinery provided by Amarillo® Gear Co. until this manual has been fully read and understood; **failing to do so will void warranty and may cause injury due to incorrect operation.**

2. RECEIVING INSPECTION

Fan Drives may be shipped via crate or skid. Inspect the drive for any damage that may have been caused during shipping.

Upon receiving a crated fan drive, a crate panel should be carefully removed to verify there is no evidence of shipping damage. Contents of crate may have shifted during transport. Use caution to avoid any injury.

2.1 INSPECT NAME PLATE

Ensure model number and ratio of received fan drive matches what was ordered.

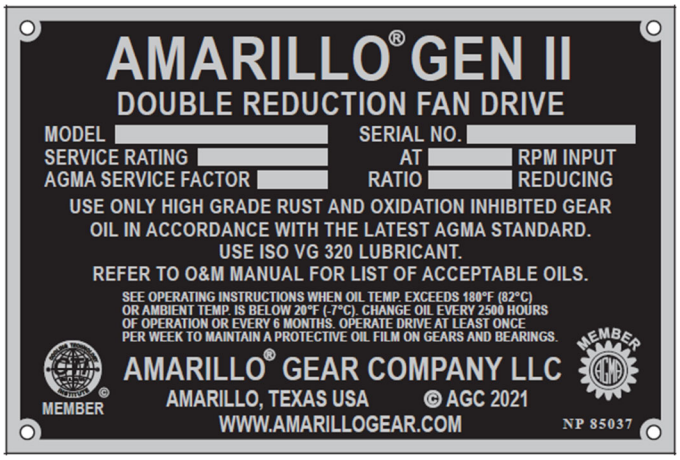

NOTE: To better assist with any inquires to Amarillo Gear Co., please provide model number, serial number, and ratio.

3. STORAGE INSTRUCTIONS

3.1 SHORT-TERM STORAGE

Dry, indoor storage is required. Fan drive is typically shipped upright on skid with first fill of operation oil included, unless shipped via air, or requested to ship "dry".

Wrapping crates, such as with a tarp, is not an acceptable means of covering and may result in damage.

3.3 LONG-TERM STORAGE

Contact Amarillo® Gear for long-term storage options and instructions for periods greater than 12 months or in adverse ambient storage conditions. Gearboxes can be ordered prepared for long-term storage.

⚠ CAUTION

Failing to follow storage maintenance guidelines may result in fan drive damage. Amarillo® Gear is not responsible for drives damaged due to improper storage.

4. INSTALLATION

Generation II™ fan drives are shipped with the fan shaft thrust bearing properly set so no adjustment necessary.

⚠ CAUTION

Failing to fill the fan drive with the proper amount and type of lubricant prior to operation will cause gear drive damage.

Do not attempt to modify or disassemble the fan drive; **doing so will void warranty, may cause permanent damage to fan drive, or injury.**

Do not overfill fan drive; doing so may have adverse effects on operation and may cause leaks and gearbox failure.

4.1 OIL FILL

Check oil level before operation. The correct oil level is to the middle of the oil level sight glass. If needed, install the correct type of oil in fan drive as directed in this O&M prior to operation (see section 9, page 7).

Flushing of any residual factory supplied oil is not required prior to filling when using products listed in Section 9, Table 2-3. After installation, follow the oil change interval specification provided in the scheduled maintenance (Section 7) of this document. Contact Amarillo® Gear for recommendations on oils not listed in this document.

4.2 CLEAN RUST PREVENTATIVE

Remove rust preventive from shaft extensions using a cloth soaked in mineral spirits, alkaline cleaner, or aliphatic solvent.

4.3 INSTALLATION AND LEVELING FAN DRIVE

Place fan drive in position. Level the fan drive and securely fasten it to its support. Shimming may be required to ensure the fan drive is level with no instance of "soft foot" that may distort the fan drive case which will cause misalignment in gearing and bearings. This can be verified after all hold down bolting has been torqued by releasing the torque one at a time and measuring with a dial indicator to see if there is any deflection.

If deflection exceeds 0.002 inch (0.05 mm), use proper shim thicknesses to eliminate the deflection. Once complete with the first hold down bolt, re-torque and move to the next hold down bolt. Proceed until all hold down bolting has been properly verified to have deflection less than 0.002 inch (0.05 mm).

Check fan tip clearance per fan manufacturer's specifications before torquing bolts or operating fan drive.

Once leveling is complete, torque all bolts to required values.

MODEL	BOLT SIZE (Inch)	BOLT SIZE (Metric)	GRADE 5 (lb·ft)	GRADE 8 (lb·ft)
GT1712	1 1/4 - 7	M30 x 3.5	1260	1800

4.4 INSTALL FAN

Install fan per manufacturer's specifications and recommendations.

4.5 CHECK MOTOR ROTATION

Verify correct motor rotation before connecting drive shaft. If the fan drive is equipped with an optional non-reverse mechanism, ensure motor has correct direction of rotation before coupling to fan drive; otherwise, damage may occur during start-up.

4.6 INSTALL DRIVE SHAFT

Connect drive shaft to motor and fan drive in accordance with manufacturer's instructions.

4.7 SERVICE PIPING

Installation of piping to the service openings will expedite routine maintenance and may be installed if desired. Service openings include oil fill and oil drain (Page 8). Use a suitable sealer for all pipe joints and coat all exposed threads to prevent corrosion. If oil drain line is used, replenish gearbox oil after filling drain line.

4.8 ELECTRICAL CONNECTIONS

Make required electrical connections to the fan drive. A qualified electrician is required to ensure proper installation.

4.9 BREATHER

The breather plug located on the top of the gear housing must be removed and piped to the outside of the stack, away from direct steam or moist air.

Ensure vent-line has a downward slope to prevent condensation from running back to gearbox.

4.10 BEARING ISOLATOR

Before operating, especially after shipment or movement of gearbox, use compressed air to blow any debris out of the bearing isolator's expulsion port. Failing to do so could cause the isolator to leak oil. The bearing isolator can be found in the Parts List in SECTION 11, REF No. 700.

5. OPERATION

ATTENTION:
NO SPECIAL BREAK-IN PROCEDURES ARE NECESSARY.

Each fan drive is factory tested, prior to shipping, to assure smooth and quiet operation. Excessive noise or vibration at initial operation is an indication of one or more of the following: (1) imbalance of the motor, coupling, or fan, (2) improperly adjusted fan blades, (3) torsional vibration, (4) unstable mounting. If noise, or vibration persists, discontinue operation and correct the problem before further operation. High vibration can be damaging to all components of the system.

5.1 REVERSING OPERATIONS

When reversing direction of rotation, allow the fan to come to a complete stop before restarting the motor. Reverse operation is permitted (without installed non-reverse option) for short periods at half speed (the reversing speed must be greater than 400 rpm). Contact the factory for recommendations prior to running the gear drive in reverse at full speed for extended time.

⚠CAUTION

Do not start electric motor if the fan is windmilling in the reverse direction, or at an rpm higher than operating speeds in the forward direction; doing so will cause damage to the fan drive.

5.2 NON-REVERSE (BACK-STOP) OPTION

If equipped with a non-reverse (back-stop) option, the non-reverse components are internal to the fan drive and shall not be operated in the reverse direction; doing so will result in major fan drive damage.

If you are unsure if the fan drive has the optional non-reverse feature, please contact Amarillo Gear for further instructions.

5.3 EXTREME COLD OPERATION

Fan drives operated in extreme cold ambient temperatures of below -20°F (-29°C) must be equipped with an oil sump heater and operated with synthetic oil. The fan drive's oil sump must be preheated to a minimum of 20°F (-7°C) before operation begins. Operation at temperatures between -21°F to 20°F will require an oil heater, or with an approved synthetic oil. In some instances, operation between 0°F to 20°F will be permitted without an oil heater, but synthetic oil is required.

6. MOTOR SELECTION

6.1 TWO SPEED

On installations with two speed motors, allow a suitable time delay before switching from high speed to low speed. The fan must be at, or below, the low speed before energizing the low-speed winding.

6.2 VARIABLE SPEED

On installations with variable speed motors, do not operate gear drive below 400 rpm motor speed. For operation at motor speeds less than 400 rpm, fan drives will require a mechanical oil pump for proper lubrication. The addition of this option will allow operation with no minimum speed restrictions.

On most fan drive systems, it is common for one or more resonant speeds to exist between stop and operating speed. Continued operation at a resonant speed will result in high lateral or torsional vibrations which can be damaging to all components of the system. Aside from high vibration levels, The most common indicator of resonance vibrations is an

unusual rumbling or clattering noise from the gear drive at a specific speed. The noise will disappear when the speed is increased or decreased. This type of noise does not indicate a defect of the fan drive, but is based on system dynamics. In the case of torsional vibration, this result when the vibratory torque exceeds the drive torque causing the gear teeth to separate and clash together very rapidly.

On variable speed applications, operation within ±10% of a resonant speed should be avoided, and the transition through a resonant speed range should be swift.

7. SCHEDULED MAINTENANCE

Maintenance logs shall be kept that detail all maintenance work.

Fan drives require an initial oil change after the first 500 hours, or four weeks of runtime (whichever comes first); after this initial oil change follow the scheduled maintenance detailed in this section.

7.1 DAILY

Visual inspections/observation for oil leaks, unusual noises/vibrations are recommended. If any of these occur, the fan drive should be shut down and the problem corrected.

7.2 WEEKLY

Check oil level using the oil level sight glass when fan drive is static (not rotating) for a minimum of 20 minutes. Add oil to fan drive if necessary.

Check the fan drive for any oil leaks.

⚠CAUTION

A plugged breather/vent-line may cause leak, or damage to gear drive if not corrected.

7.3 EVERY SIX MONTHS OR 2500 HOURS

WHICHEVER COMES FIRST

Check alignment of all components in the system.

Check all oil plugs and pipe fittings for leaks.

Change the fan drive lubricant.
With the oil at operating temperature, completely drain the oil by removing the drain plug.

Inspect the lubricant for sludge, metal shavings, foreign material, and free water. Oil samples can also be sent to a lab for further evaluation.

If the oil condition is acceptable, the fan drive may be refilled with new oil without flushing.

Refill the fan drive through the filler plug on the top cover, with a recommended mineral oil or synthetic oil listed in this publication (See Section 9).

Very humid environments, rapid changes in ambient temperature, and high operating oil temperature are some of the extreme operating conditions that lead to poor oil quality and formation of sludge inside the fan drive.

⚠CAUTION

Poor oil quality after six months of operation indicates extreme operating conditions, and the change interval should be reduced to 2 to 3 months; failure to do so will cause shortened gearbox life.

7.4 EXTENDED OIL CHANGE INTERVALS

This Generation II™ line of gearboxes are designed to minimize oil temperatures, which can result in extended oil change intervals. To take advantage of these extended oil change intervals, oil samples must be periodically analyzed to assess oil quality.

Users should sample and analyze oil every three months, with samples taken shortly after gearbox shut down while oil is still well mixed. A hand pump should be used to pull the sample through the side

inspection opening a few inches below the surface of the oil, but well above the bottom of the oil sump. Remote sampling may be used if sample is representative of the oil circulating in the gearbox (e.g., remote sample line must be circulated to bring active oil from the gearbox sump to the sampling location).

Used oil acceptance criteria for continuing use is as follows:

Water content < 400 ppm

TAN < 2.0

Viscosity within ± 5% of previous sample, or within ± 10% of original fill sample

If these limits are exceeded, change fan drive oil per Section 9.

⚠CAUTION

Ensure that all moving parts have stopped before attempting to service or inspect fan drive.

Dispose of lubricants in an appropriate manner in accordance with local, state, and federal regulations.

Failing to follow the recommended oil change intervals as well as intervals in extreme conditions may result in premature failure of the drive.

8. INACTIVE FAN DRIVES

Special precautions are necessary during periods of inactivity more than one week. When the internal parts are not continually bathed by the lubricant as during operation, the fan drive is vulnerable to attack by rust and corrosion.

For best results, run the fan at a minimum of 400 rpm motor speed for five minutes once per week throughout the shutdown period to maintain the oil film on the internal parts of the fan drive.

9. LUBRICATION

Use only Rust and Oxidation Inhibited Gear Oils in accordance with AGMA 9005-F16, or more current standard. Use a lubricant ISO VG 320. ISO VG 220 oil can be used in the GEN II; however, the oil change interval must be shortened to achieve a gearbox lifetime that is comparable to what can be achieved with ISO VG 320. This will be dependent on operating temperature.

9.1 MINERAL OILS

AMBIENT TEMP AT GEAR DRIVE	20°F TO 120°F (-7°C TO 49°C)
ISO GRADE	320
CASTROL	CASTROL HYSPIN VG 320
CITGO	CITGO PACEMAKER SD 320
CITGO	CITGO PACEMAKER 320
MOBIL	MOBIL VACULINE 537
MOBIL	MOBIL MULTIPURPOSE R&O 320
PHILLIPS 66	PHILLIPS 66 BEARING OIL M320
SHELL	SHELL MORLINA S2 B320
SHELL	SHELL MORLINA S3 BA 320
TOTAL	TOTAL CIRKAN RO 320
TOTAL	TOTAL CORTIS MS 320

***LIST OF BRAND NAMES IS FOR PURPOSE OF IDENTIFYING TYPES & IS NOT TO BE CONSTRUED AS EXCLUSIVE RECOMMENDATIONS*

9.2 SYNTHETIC OILS/OIL HEATERS

Synthetic lubricants offer advantages of extended service life, a broader operational temperature range, reduced friction, and the ability to maintain a higher film strength, which can extend the service life of the fan drive.

Synthetic lubricants can be made of various base stocks which are incompatible with certain fan drive components; therefore, any synthetic lubricant not listed in this bulletin should be approved by

Amarillo® Gear Company. Change intervals for synthetic lubricants should not be extended beyond the change interval for mineral oil without a comprehensive oil quality monitoring program (Section 7.4).

If the fan drive is started when the ambient temperature is below 20°F (-7°C), use a lube oil heater, or an approved synthetic oil. Optional lube oil heaters may be ordered on a new fan drive or retrofitted in the field.

Fan drives operated in extreme cold ambient temperatures of below -20°F (-29°C) must be equipped with an oil sump heater and operated with synthetic oil. The fan drive's oil sump must be preheated to a minimum of 20°F (-7°C) before operation begins.

If the operating oil temperature exceeds 180°F (82°C) for extended periods of time or the fan drive is started when the ambient temperature is below 20°F (-7°C), a synthetic oil is required.

AMBIENT TEMP AT GEAR DRIVE	**-20°F TO 150°F (-29°C TO 66°C)**
ISO GRADE	320
CASTROL	CASTROL ALPHA HC 320
CITGO	CITGO CITGEAR SYNTHETIC HT 320
MOBIL	MOBIL SHC 632
PHILLIPS 66	PHILLIPS 66 SYNCON R&O 320
SHELL	SHELL MORLINA S4 B 320
TOTAL	TOTAL SYNOLAN 1000 OILS 320

.

***LIST OF BRAND NAMES IS FOR PURPOSE OF IDENTIFYING TYPES & IS NOT TO BE CONSTRUED AS EXCLUSIVE RECOMMENDATIONS*

9.3 OIL CAPACITY

MODEL	GALLONS	LITERS
GT1712	14	53

By following the above procedures, each Amarillo® Generation II™ Double Reduction Fan Drive will provide years of useful service. In the event repairs are necessary, contact service representative for available parts. Prompt factory re-build service is also available.

10. EXTERNAL LOCATIONS

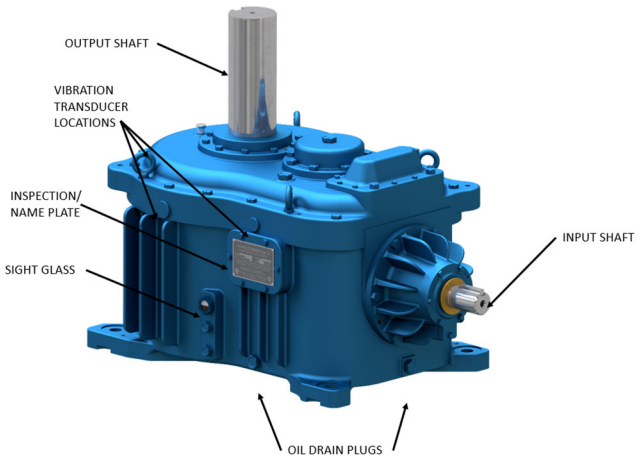

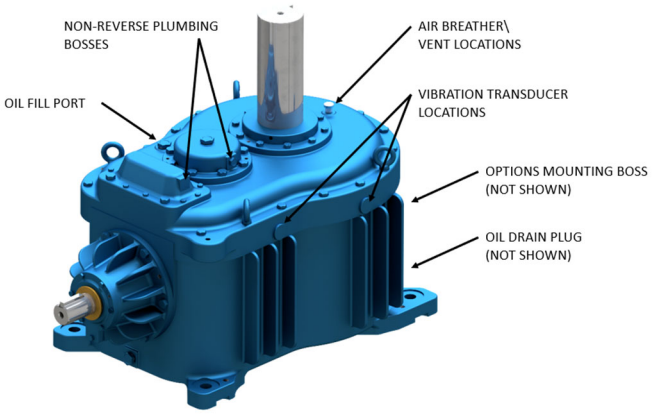

11. PARTS LIST

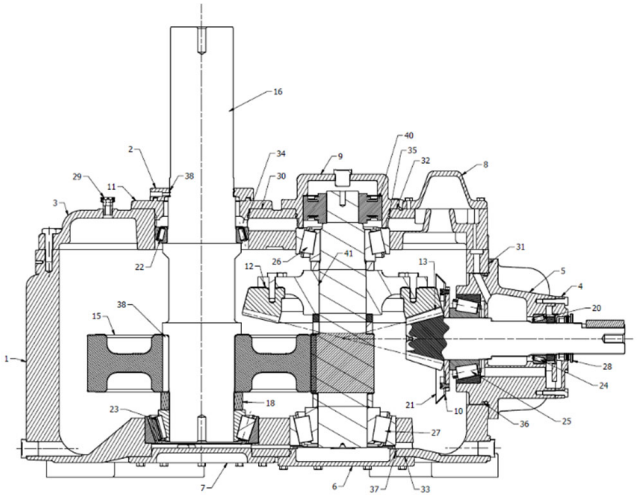

REF NO.	PART NAME	GT1712	REF NO.	PART NAME	GT1712
1	GEAR CASE	O410	21	OIL SLINGER	570 – GT1712
2	UPPER OUTPUT COVER	O411	22	UPPER BRG (OUT)	600 – GT1712
3	COVER	O412	23	LOWER BRG (OUT)	601 – GT1712
4	ISOLATOR PLATE	O414	24	OUTER BRG (HOR)	602 – GT1712
5	HORIZONTAL CARRIER	O415	25	INNER BRG (HOR)	603 – GT1712
6	LOWER INT. COVER	O416	26	UPPER BRG (INT)	604 – GT1712
7	LOWER OUT. COVER	O417	27	LOWER BRG (INT)	605 – GT1712
8	OIL SLINGER COVER PLATE	O418	28	BEARING ISOLATOR	24370
9	UPPER INT. COVER PLATE	O419	29	BREATHER PLUG	823
10	OIL SLINGER MOUNTING PLATE	O420	30	BRG SHIMS (UPP. OUT)	824 – GT1712
11	OUT ISOLATOR PLATE	O421	31	BRG SHIMS (HORZ)	825 – GT1712
12	GEAR MOUNT	GMV O422	32	BRG SHIMS (UPP. INT.)	826 – GT1712
---	INSPECTION PLATE	L18M	33	BRG SHIMS (LOW. INT.)	827 – GT1712
13	BEVEL GEAR SET	100 - GT1712	34	O-RING	M AS263
14	HELICAL PINION	200P – GT1712	35	O-RING	M AS263
15	HELICAL GEAR	200G – GT1712	36	O-RING	M AS449
16	OUTPUT SHAFT	85014	37	O-RING	M AS267
17	ABOVE GEAR SPACER (INT)	450 – GT1712	38	O-RING	M AS251
18	BELOW GEAR SPACER (OUT)	451 – GT1712	39	GEAR KEY (OUT)	910 – GT1712
19	BELOW GEAR SPACER (INT)	452 – GT1712	41	GEAR KEY (INT)	911 – GT1712
20	HORZ. LOCKNUT	560 – GT1712	---	OIL SIGHT GAUGE	P1022-6