Amarillo® Gear Company LLC

AMARILLO®
ENDURANCE

RIGHT ANGLE PUMP DRIVE

MEMBER AGMA

FM APPROVED

LLOYD'S REGISTER QUALITY ASSURANCE · ISO9001

UKAS QUALITY MANAGEMENT 001

A Marmon | Berkshire Hathaway Company

OUR ENDURING HISTORY

Founded in 1917 in Amarillo, Texas, Amarillo® Gear Company, LLC. has been designing and manufacturing spiral bevel right angle gear drives since 1934. Our pump drive products have evolved with advancements in technology, but our commitment to producing the highest quality pump drives for the best value is as strong as ever; it's in our blood. You do not have to take our word for it though, our processes are checked regularly by third party inspectors, per our ISO 9001:2015 certification requirements.

All Amarillo® Pump Drives are designed to exceed AGMA requirements, and tested before they are shipped. For fire protection systems, Amarillo® Gear offers sizes up to 1,200 HP, which are listed with Factory Mutual (FM) and exceed NFPA-20 requirements.

We look forward to the opportunity to provide our products and services.

FEATURES

Design–

- The Endurance product line is specifically designed for the operating conditions encountered in industrial, municipal, large irrigation and fire suppression applications. This technology is purpose built to assure optimum reliability, long service life, and minimal maintenance. The Endurance product line is designed according to AGMA standards, meeting or exceeding FM and NFPA–20 requirements.

Efficiency–

- These models have an efficiency of 96%–98%. An efficiency of 96% is recommended for system designs. The actual efficiency will depend on the operating environment and duty of the gearbox.

Thermal–

- These models are equipped with submerged copper cooling coils for fresh water cooling applications.
- A Cu–Ni (90–10) cooling coil is available for applications with salt water cooling.

Spiral Bevel Gears–

- Spiral bevel gears are designed according to AGMA standards, meeting or exceeding FM and NFPA–20 requirements.
- Gears are lapped in pairs to provide better durability and sound characteristics.
- Case hardened gears optimize torque capacity, while enhancing abrasion resistance.

Bearings–

- All bearings are standard sizes and are only sourced from top–tier manufacturers.

Gearcase–

- High tensile strength ASTM A48, class 30 cast iron ensures a rigid housing for better shaft alignment, while providing superior noise dampening.

Lubrication System–

- A standard, shaft–driven oil screw provides lubrication to all bearings and the gear mesh. (Electric and gerotor oil pumps are also available.)

Condition Monitoring–

- Instrumentation and mounting locations are available.
- Factory modifications are available to accommodate many condition monitoring instruments.

Slant Drive–

- The ENDURANCE models may be tilted up to 30° from vertical, without any modifications.

PROPER SELECTION OF A PUMP DRIVE

Ratio–

- The ratios shown in Table 1 are nominal. Exact ratios are shown in Table 3.
- The gearbox ratio format is horizontal shaft speed : vertical shaft speed. For example, a 6:5 means that there are six horizontal rotations for every five vertical shaft rotations.

Rating–

- The power ratings in Table 1, are relative to a pump speed of 1,760 rpm, and include a service factor (SF) of 1.50.
- The ratings in Table 1 and 2 are FM listed, and comply with NFPA–20 requirements.
- Table 7 can be used to calculate power and thrust ratings for non–standard speeds.

Shaft Rotations–

These models are only available with Figure 1 (CW—CCW) shaft rotations. Other shaft rotations are available from our LEGACY gearbox catalog.

Common Selection Standards–

- NFPA–20: Selection based on the maximum power and thrust of the pump.
- API 677: This standard is intended for general purpose gear units for chemical, petroleum and gas industry services. This standard is not appropriate for gearboxes used in firefighting systems. Use of this standard will result in a significantly more expensive solution than would otherwise be recommended.

Selection Procedure–

Model and Ratio,

First determine the required ratio based upon the input and output shaft speeds. Then using Table 1, locate the power rating that meets the specified requirements (Please note that all listed power ratings have a 1.50 service factor). The gearbox model is provided in the left column of the row that has the selected rating. (If either the model or ratio is not shown, please refer to our LEGACY gearbox catalog.)

Thrust Bearing,

Using Table 2, identify the type of bearing support best suited for the application. Using the chosen model, select the system (E or EH) with a continuous thrust rating that is at least as great as needed. Please note that there is no minimum thrust requirements for the Endurance line of pump drives. Contact factory for upthrust capacity.

Application Data Request Form

Company Name: _____ Date: _____
Contact: _____ Telephone: _____
Location: _____ email: _____
(Please attach any specifications that apply.)

Application Type: (Please select)
Irrigation Fire Flood Control Water Treatment Cooling Water Circulation Bow Thruster
Other: _____

Selection Data:
Service Factor: (Default is 1.50)

Pump's	Continuous	Maximum	Minimum
Speed, rpm			
Power, hp			
Thrust (down), lbf			

Thrust (up), lbf _____ Duration
Less than 2 min. _____
If more, approx. time: _____

Driver Type: IC Engine Electric Motor Steam Turbine

Continuous Power, hp: _____ Continuous Speed, rpm: _____

Rotation of Shafts
The Endurance models are available with the shaft rotations shown in the below figure. Please contact the Amarillo Gear Company, if another rotation is needed.

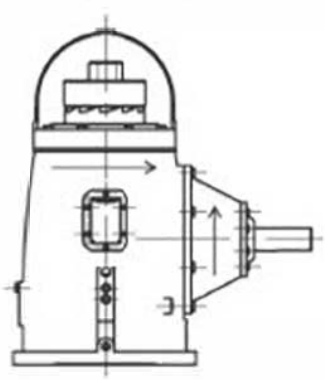

Figure1, CW - CCW

TABLE 1: POWER RATINGS (1760 VERTICAL RPM WITH A 1.5 S.F.)

	2:3	5:6	10:11	1:1	11:10	6:5	4:3	3:2	7:4
E450B	C.F.	450	450	450		450	450	C.F.	
E500B	C.F.	500	500	500		500	500	C.F.	
E600B	C.F.			600	600	600	600	C.F.	600
E750B	C.F.			750	750	750	750	C.F.	750
E1000B	C.F.			1000	1000	1000	1000	1000	

TABLE 2: DOWN THRUST RATINGS (1,760 VERTICAL RPM)

*Refer to Table 7 for other speeds.

	Continuous Thrust Rating, lb_f
E450B	21,000
E500B	21,000
E600B	27,000
E750B	27,000
E1000B	27,000

TABLE 3: EXACT RATIOS

	2:3	5:6	10:11	1:1	11:10	6:5	4:3	3:2	7:4
E450B	C.F.	0.838:1	0.912: 1	1.029: 1		1.194: 1	1.333: 1	C.F.	
E500B	C.F.	0.838: 1	0.912: 1	1.029: 1		1.194: 1	1.333: 1	C.F.	
E600B	C.F.			1.000: 1	1.097: 1	1.156: 1	1.321: 1	C.F.	1.760: 1
E750B	C.F.			1.000: 1	1.097: 1	1.156: 1	1.321: 1	C.F.	1.760: 1
E1000B	C.F.			1.000: 1	1.089: 1	1.212: 1	1.321: 1	1.515: 1	

TABLE 4: ALLOWABLE SPEED RANGE (WITHOUT MODIFICATIONS)

*Contact factory for speeds outside ranges listed

Model	Minimum Vertical Speed	Maximum Vertical Speed
E450B	450 RPM	2400 RPM
E500B	450 RPM	2400 RPM
E600B	450 RPM	1932 RPM
E750B	450 RPM	1932 RPM
E1000B	450 RPM	2200 RPM

DIMENSIONS

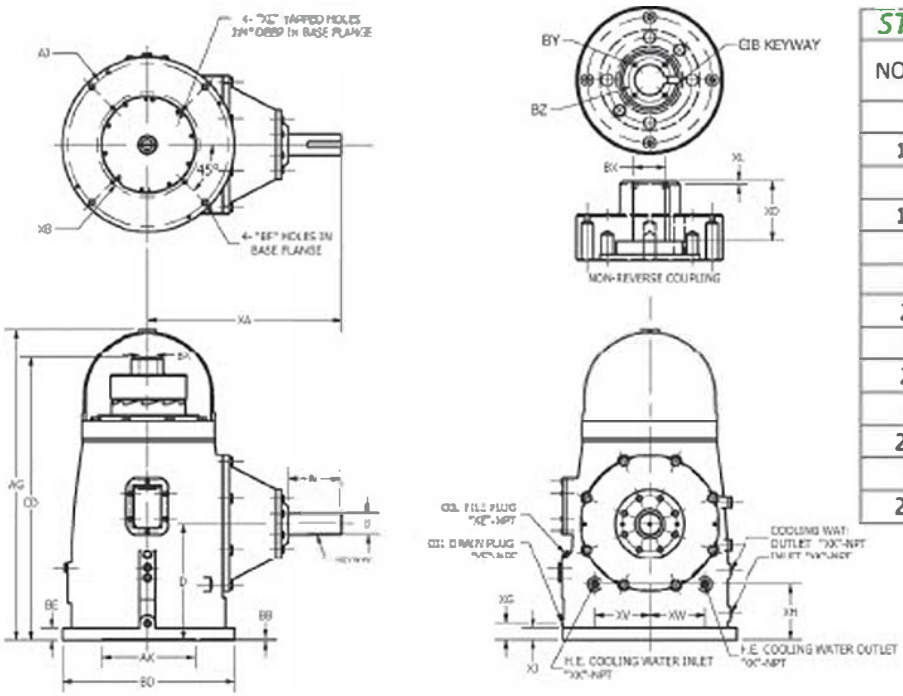

STANDARD COUPLING DIMENSIONS (INCH)					
NOMINAL	ACTUAL	GIB KEYWAY	BY	BZ	XL
1 1/2	1.501	3/8 X 3/16	1/4 - 20	2 1/8	9/32
1 11/16	1.688	3/8 X 3/16	1/4 - 20	2 1/2	9/32
1 3/4	1.751	1/2 X 1/4	1/4 - 20	2 1/2	9/32
1 15/16	1.938	1/2 X 1/4	1/4 - 20	2 1/2	9/32
2	2.001	1/2 X 1/4	1/4 - 20	2 1/2	9/32
2 1/8	2.126	1/2 X 1/4	3/8 - 16	3 1/4	9/32
2 3/16	2.188	1/2 X 1/4	3/8 - 16	3 1/4	9/32
2 1/4	2.251	1/2 X 1/4	3/8 - 16	3 1/4	9/32
2 7/16	2.438	5/8 X 5/16	3/8 - 16	3 1/4	9/32
2 1/2	2.501	5/8 X 5/16	3/8 - 16	3 1/4	9/32
2 11/16	2.688	5/8 X 5/16	3/8 - 16	3 3/4	9/32
2 3/4	2.751	5/8 X 5/16	3/8 - 16	3 3/4	9/32
2 15/16	2.938	3/4 X 3/8	3/8 - 16	3 3/4	7/16

TABLE OF DIMENSIONS STANDARD DRIVE (INCH)

Model	D	N	Horizontal Shaft U			AG	CD	AJ	BD	BE	BF	XA	XB	XC	XD	XE	XF	XG	XH	XK	XV	XW	BX MAX.
			Nom.	Actual	Keyway																		
E450B	16.50	6.5	3.000	2.998	3/4 X 3/8	44.25	40	23	24.5	1.625	0.813	26.5	14.75	5/8-11 NC	4.5	0.75	0.75	2.375	7.81	0.75	8.00	8.00	2.438
E500B	16.50	6.5	3.000	2.998	3/4 X 3/8	44.25	40	23	24.5	1.625	0.813	26.5	14.75	5/8-11 NC	4.5	0.75	0.75	2.375	7.81	0.75	8.00	8.00	2.438
E600B	16.50	7.5	3.000	2.998	3/4 X 3/8	44.25	40	23	24.5	1.625	0.813	27.5	14.75	5/8-11 NC	4.5	0.75	0.75	2.375	7.81	0.75	8.00	8.00	2.438
E750B	16.50	7.5	3.000	2.998	3/4 X 3/8	44.25	40	23	24.5	1.625	0.813	27.5	14.75	5/8-11 NC	4.5	0.75	0.75	2.375	7.81	0.75	8.00	8.00	2.438
E1000B	18.75	8.3	3.000	2.998	3/4 X 3/8	48.5	42.5	23	24.5	1.875	0.813	32	14.75	5/8-11 NC	4.5	1.00	1.00	2.563	9.63	0.75	8.25	8.25	2.938

ENDURANCE SHAFT ROTATION

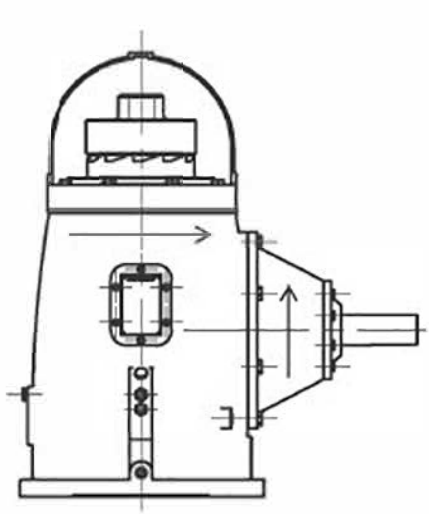

TABLE 7: POWER AND THRUST ADJUSTMENTS

Vertical Shaft RPM	Percent of Rated Horsepower	Percent of Thrust Capacity
430	37%	160%
580	46%	145%
690	52%	137%
720	53%	135%
870	61%	126%
960	65%	122%
1160	75%	115%
1460	88%	106%
1760	100%	100%
2000	107%	96%
2200	112%	93%
2400	117%	90%

*Please refer to Table 4 for vertical speeds above 1760 rpm to ensure that the maximum vertical speeds are not exceeded.

WEIGHTS AND DIMENSIONS

	Estimated Weight (lbf)			Crate Dimensions (in)		
	Net	Skid	Crate	Length	Width	Height
450B	1,230	1,310	1,510	32	44	52
500B	1,230	1,310	1,510	32	44	52
600B	1,250	1,280	1,530	32	44	52
750B	1,250	1,280	1,530	32	44	52
1000B	1,550	1,640	1,915	32	45	58

SPECIAL DRIVES

Our LEGACY product line includes other models and ratios, including configurations that allow a vertical electric motor and an auxiliary engine to power a vertical pump. **Please visit our website for a complete listing of the Amarillo® pump drives.**

Amarillo Gear Company reserves the right to modify our gear drives that may alter dimensions. The dimensions shown in this catalog may not exactly reflect the dimensions of the gear drives currently being offered. Request a Certified Dimension print for construction use.

To view the warranty, sales terms and conditions, please visit www.amarillogear.com

Amarillo® Gear Company LLC
Post Office Box 1789 • Amarillo, Tx 79105 • 2401 Sundown Lane (79118) • 806-622-1273 • Fax 806-622-3258
www.amarillogear.com e-mail: info@amarillogear.com
© AGC 2021

A Marmon | Berkshire Hathaway Company